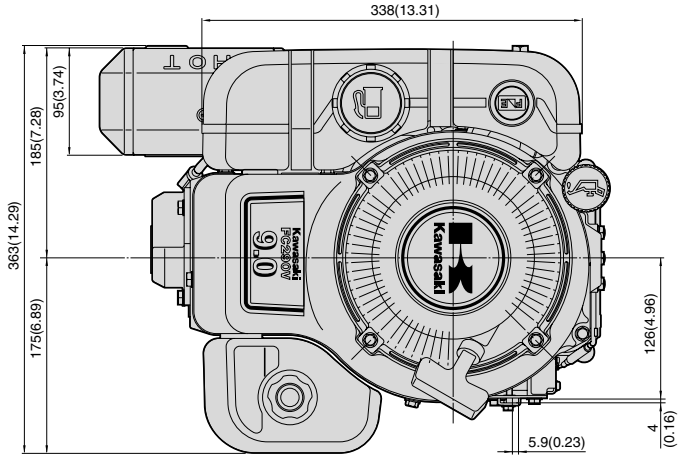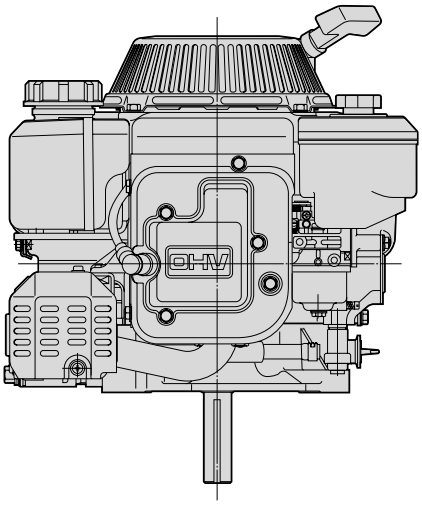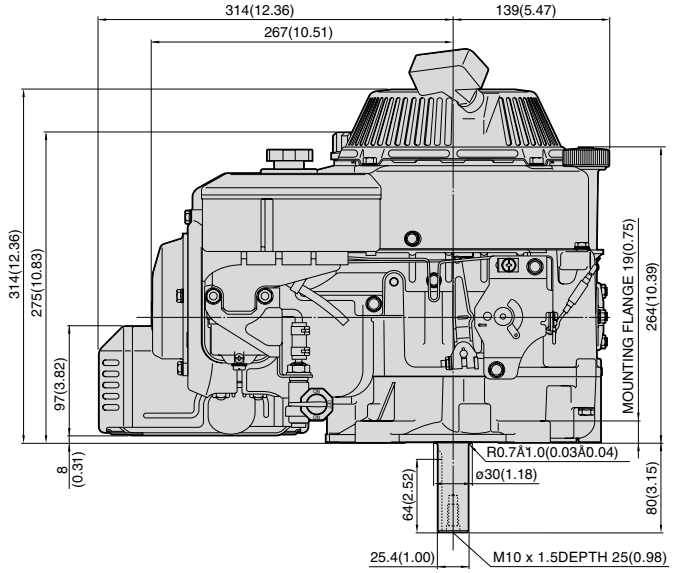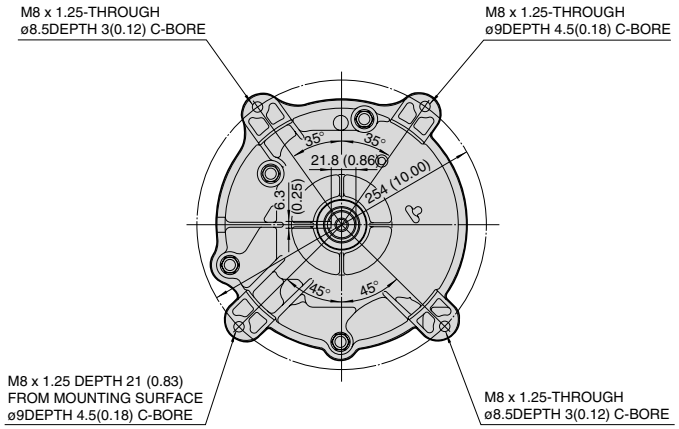FC290V : DIMENSIONAL SPECIFICATIONS 970530