FE250D : DIMENSIONAL SPECIFICATIONS
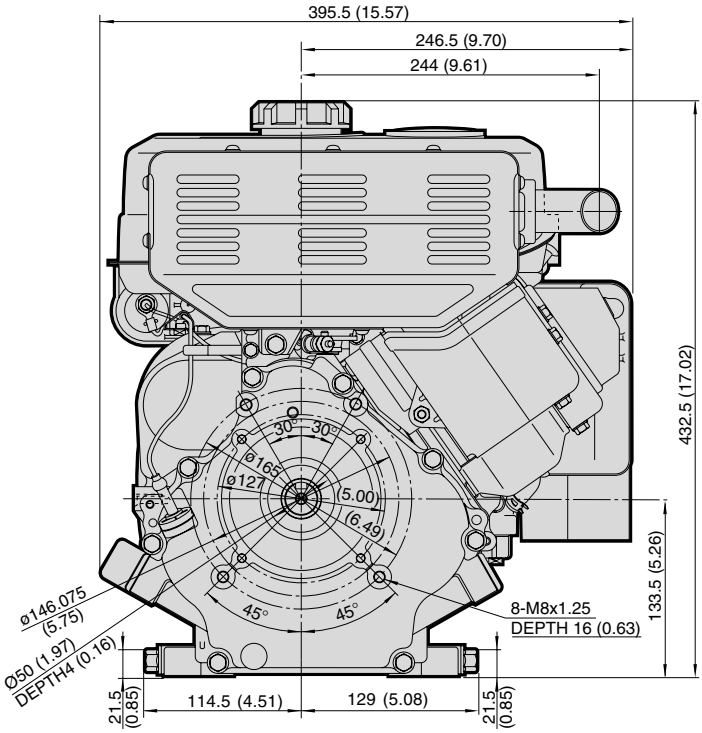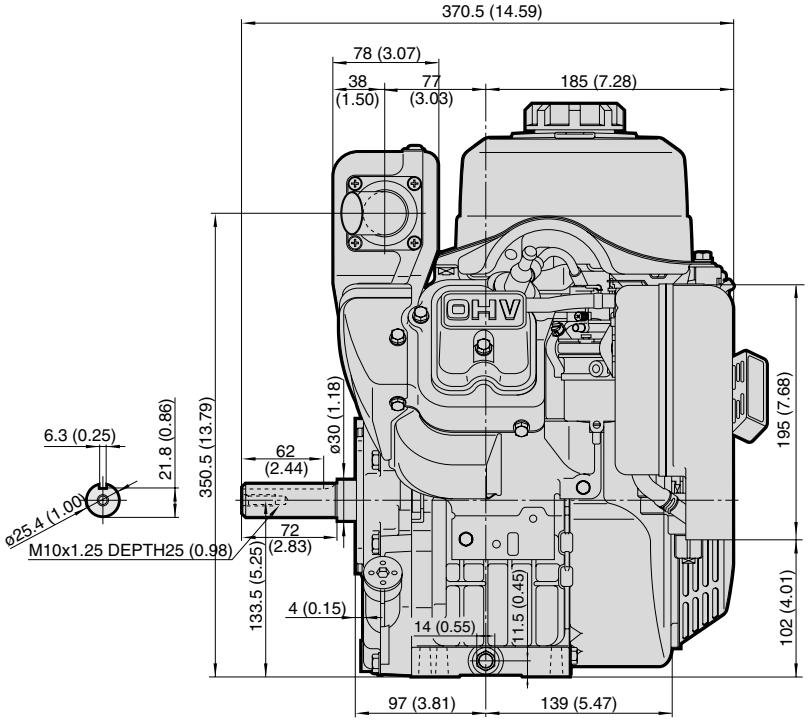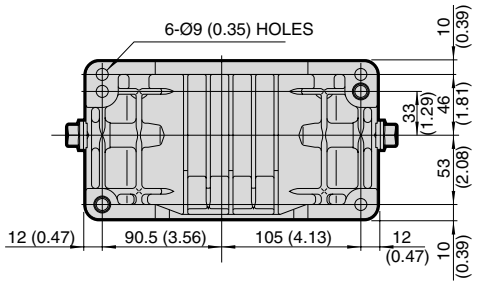
970530